United States Patent [19]

Atchisson

[11] **Patent Number: 4,893,547**

[45] **Date of Patent: Jan. 16, 1990**

[54] **BOLT MECHANISM FOR FIRE ARM**

[76] Inventor: **Maxwell G. Atchisson**, 6695 Ridgemoore Dr., Doraville, Ga. 30360

[21] Appl. No.: **96,934**

[22] Filed: **Sep. 14, 1987**

Related U.S. Application Data

[60] Division of Ser. No. 784,157, Oct. 4, 1985, Pat. No. 4,693,170, which is a division of Ser. No. 639,526, Aug. 8, 1984, Pat. No. 4,553,469, which is a continuation of Ser. No. 336,328, Dec. 31, 1981, abandoned.

[51] **Int. Cl.**[4] **F41D 5/04**

[52] **U.S. Cl.** **89/187.01**

[58] **Field of Search** 89/165, 173, 187.01

[56] **References Cited**

U.S. PATENT DOCUMENTS

981,210	1/1911	Menteyne et al.	89/165
1,043,670	11/1912	Chronis	89/187.01
2,775,166	12/1956	Janson	89/191.01
3,540,147	11/1970	Cream et al.	89/187.01

Primary Examiner—Stephen C. Bentley
Attorney, Agent, or Firm—Jones, Askew & Lunsford

[57] **ABSTRACT**

A locked breach, gas operated long action firearm capable of firing heavy caliber shotgun or rifle shells with substantially reduced recoil. The gas piston and bolt carrier assembly are supported for recoil movement along a single guide rod which extends the entire length of the gun, permitting a longer recoil path resulting in reduced impulse due to recoil. The guide rod has a noncircular or radially-assymmetrical cross-section mating with a corresponding opening in the gas piston, so that the bolt carrier assembly remains in alignment over the entire recoil path. Separate close-bolt and open-bolt embodiments are disclosed, and the open-bolt embodiment is selectively capable of firing either semi-automatic or full-automatic while permitting reliable cartridge feeding from a box or drum magazine.

7 Claims, 18 Drawing Sheets

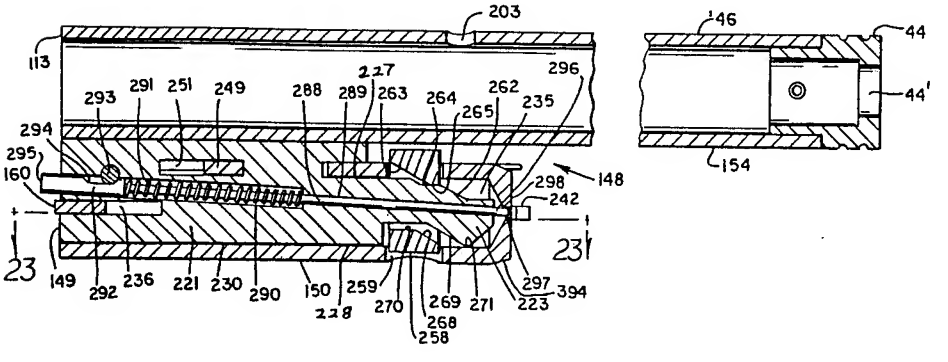

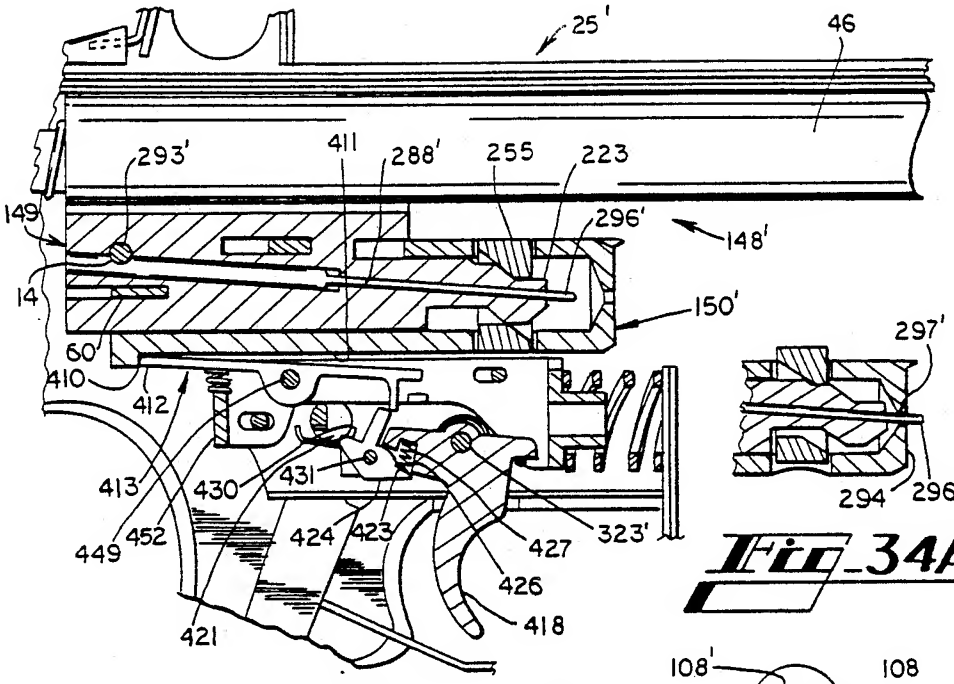

Fig_34A

Fig_32

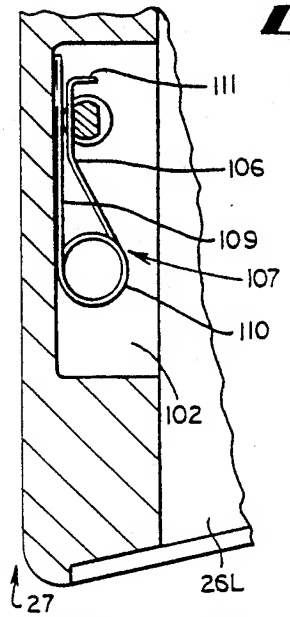

Fig_9

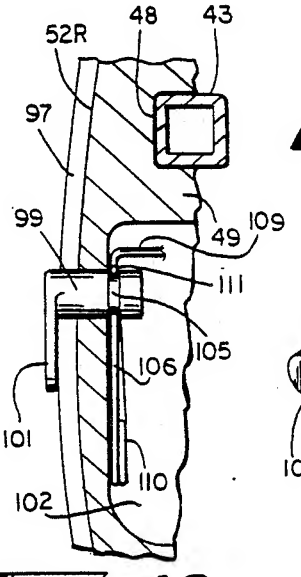

Fig_10

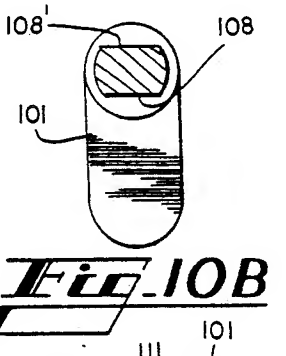

Fig_10B

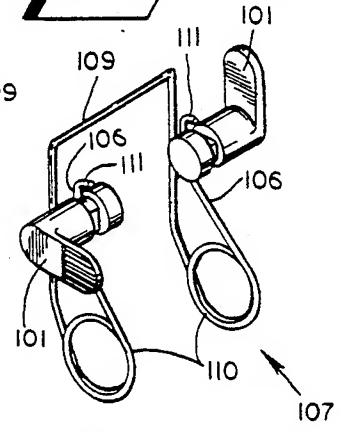

Fig_10A

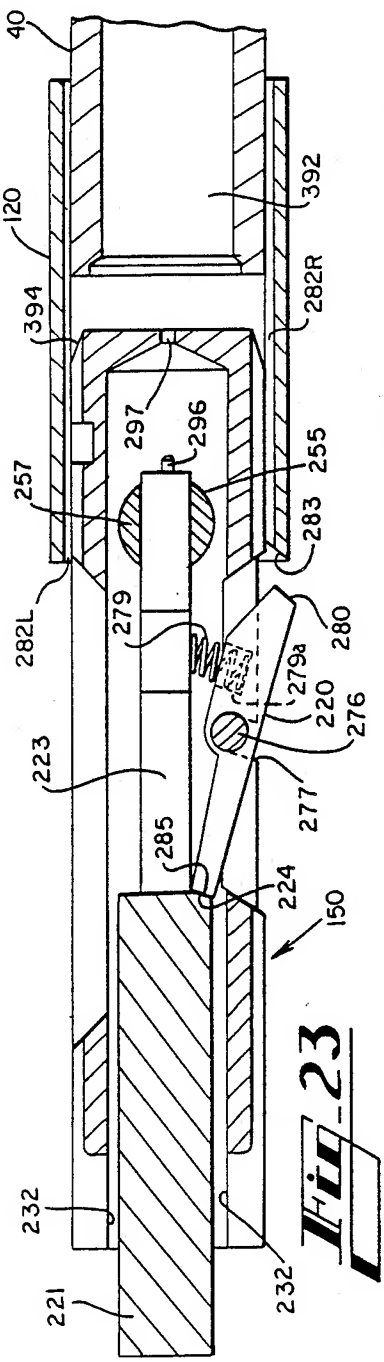

Fig. 23

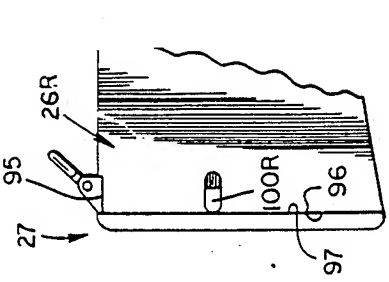

Fig. 8B

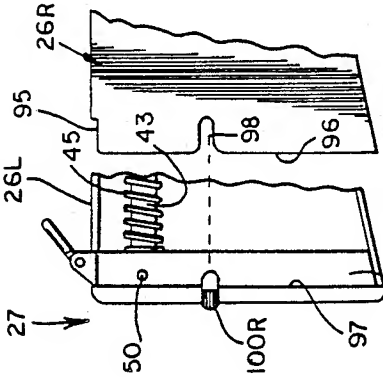

Fig. 8A

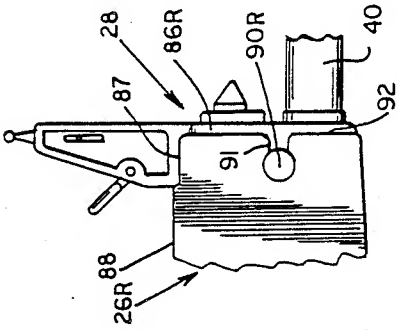

Fig. 7B

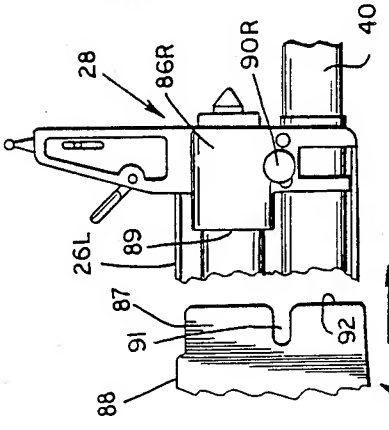

Fig. 7A

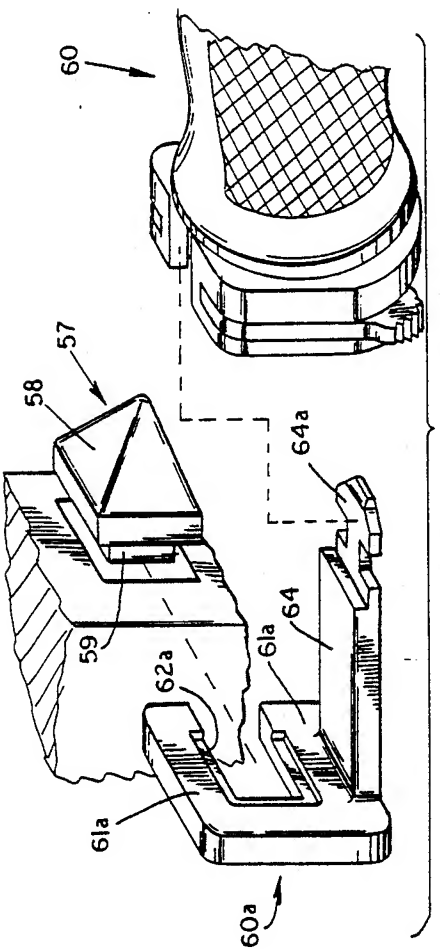

Fig. 12

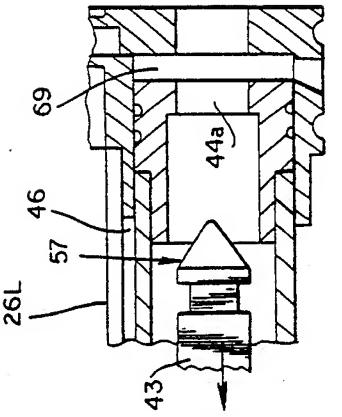

Fig. 11C

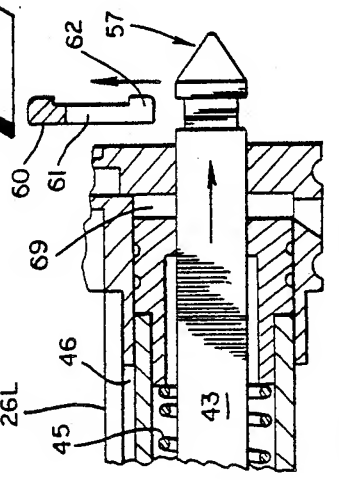

Fig. 11B

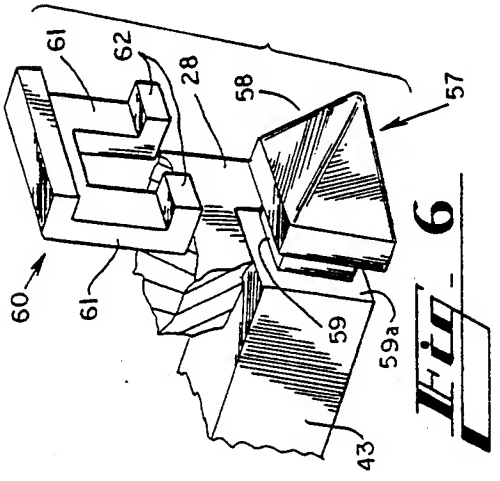

Fig. 6

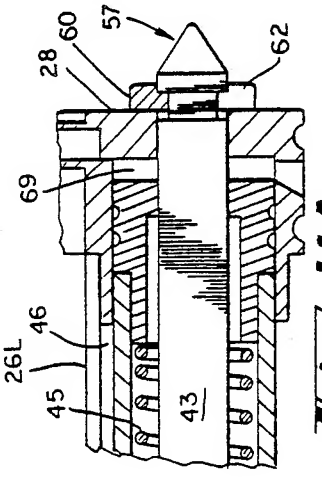

Fig. 11A

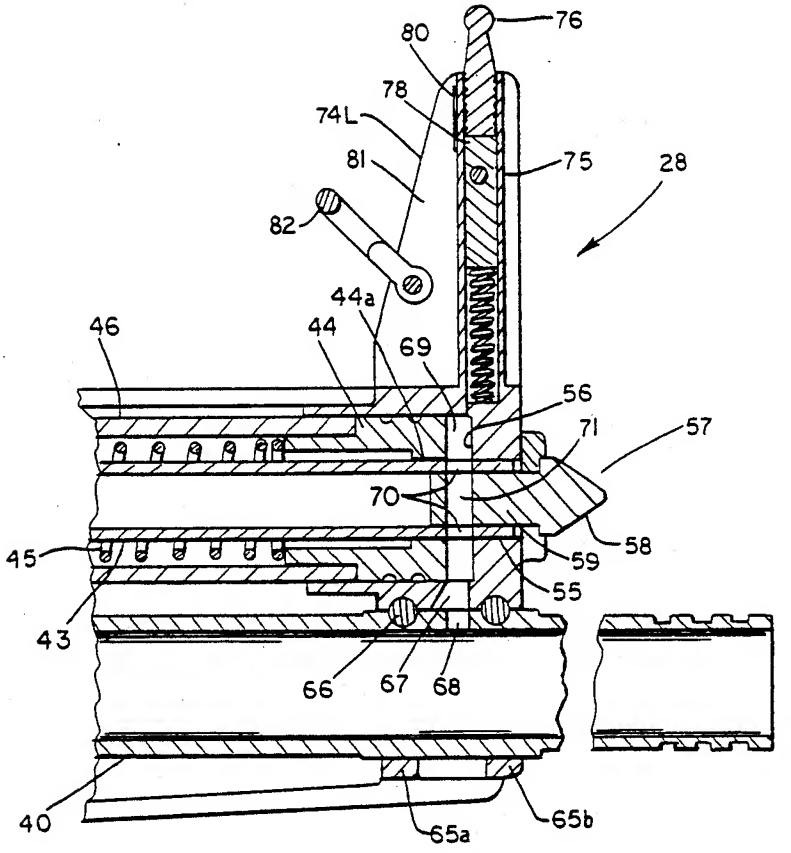
80
76
78
74L
81
75
28
82
44a
46
44
69
56
71
57
70
58
45
59
55
43
66
67
68
40
65a
65b

Fig_5

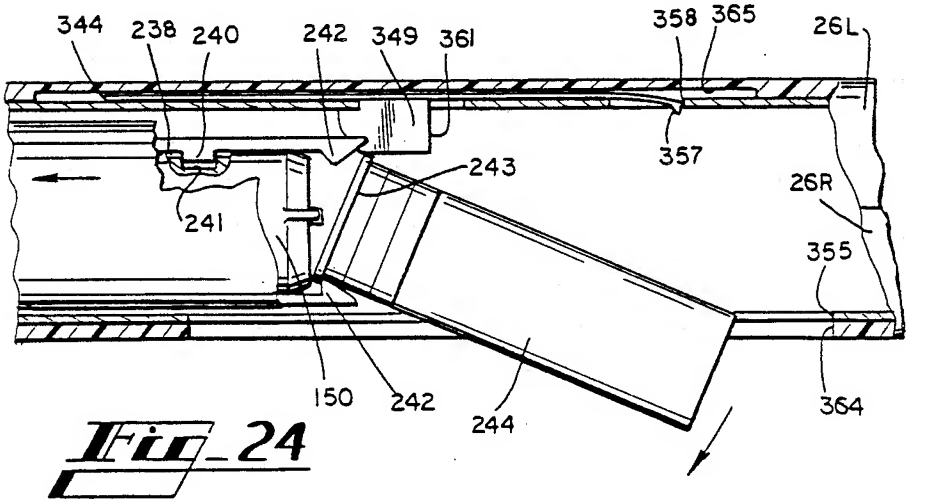
344
238
240
242
349
361
358
365
26L
357
243
26R
241
355
150
242
244
364

Fig_24

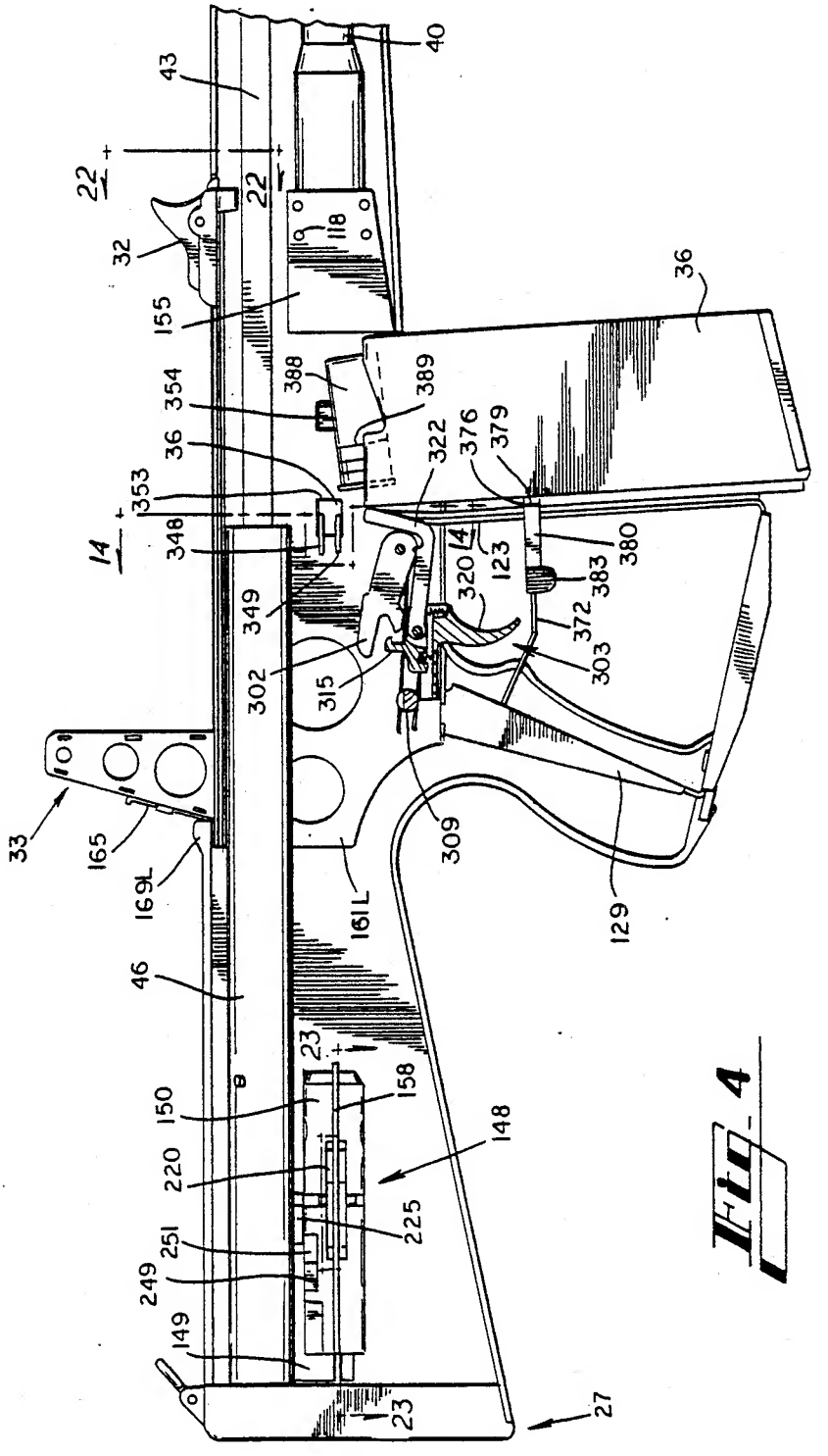
40
43
22
22
118
32
155
36
388
389
354
322
376
379
36
353
14
348
320
14
123
380
383
349
372
303
302
315
33
165
169L
309
161L
129
46
23
150
158
148
220
225
251
249
149
23
27

Fig. 4

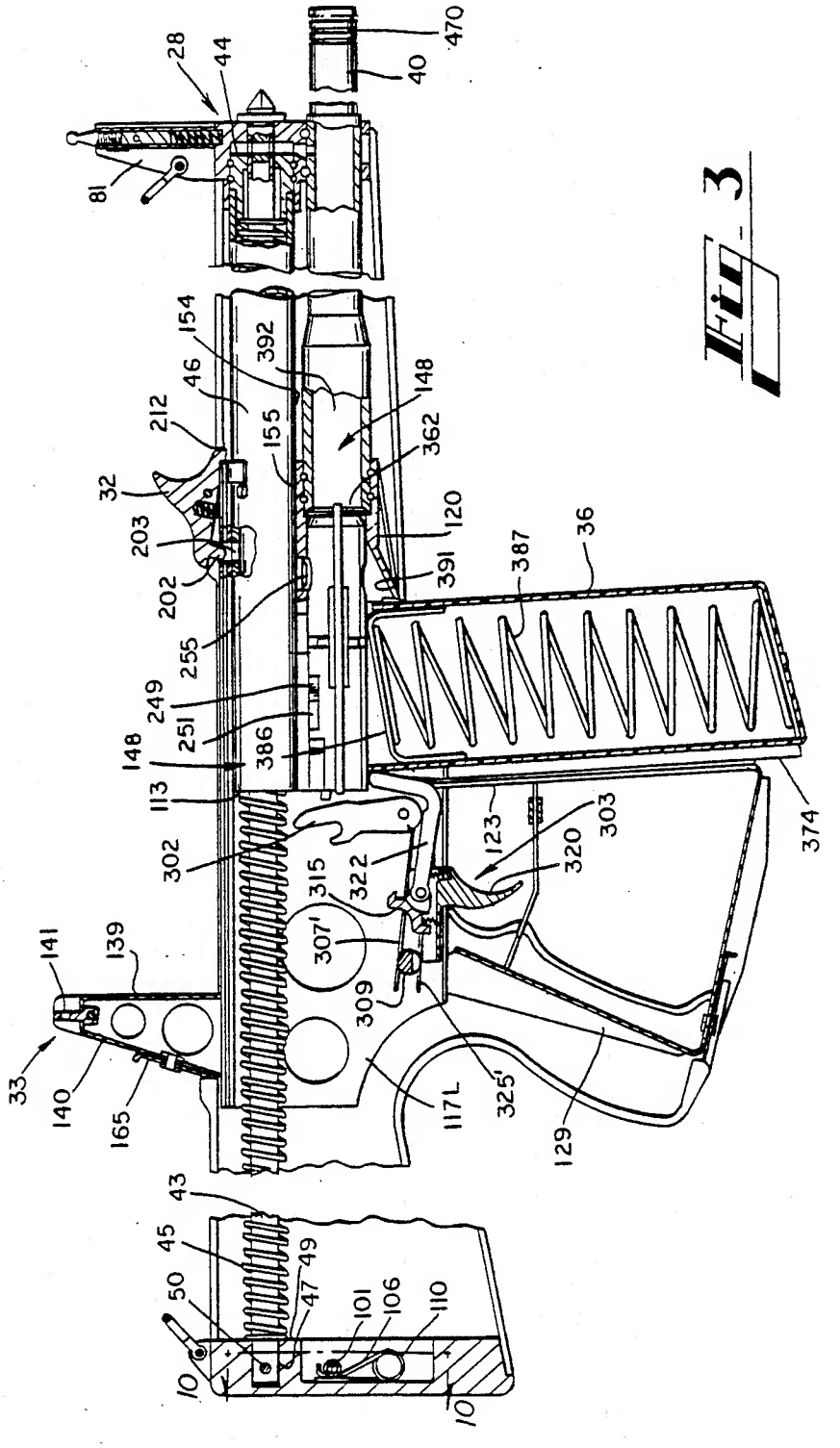
28
44
470
40
81
154
392
46
148
212
155
362
32
120
203
391
387
36
202
255
249
251
386
148
113
302
315
322
123
303
320
374
307'
309
141
139
33
140
165
117L
325'
129
43
45
49
47
50
101
106
110
10
10

Fig. 3

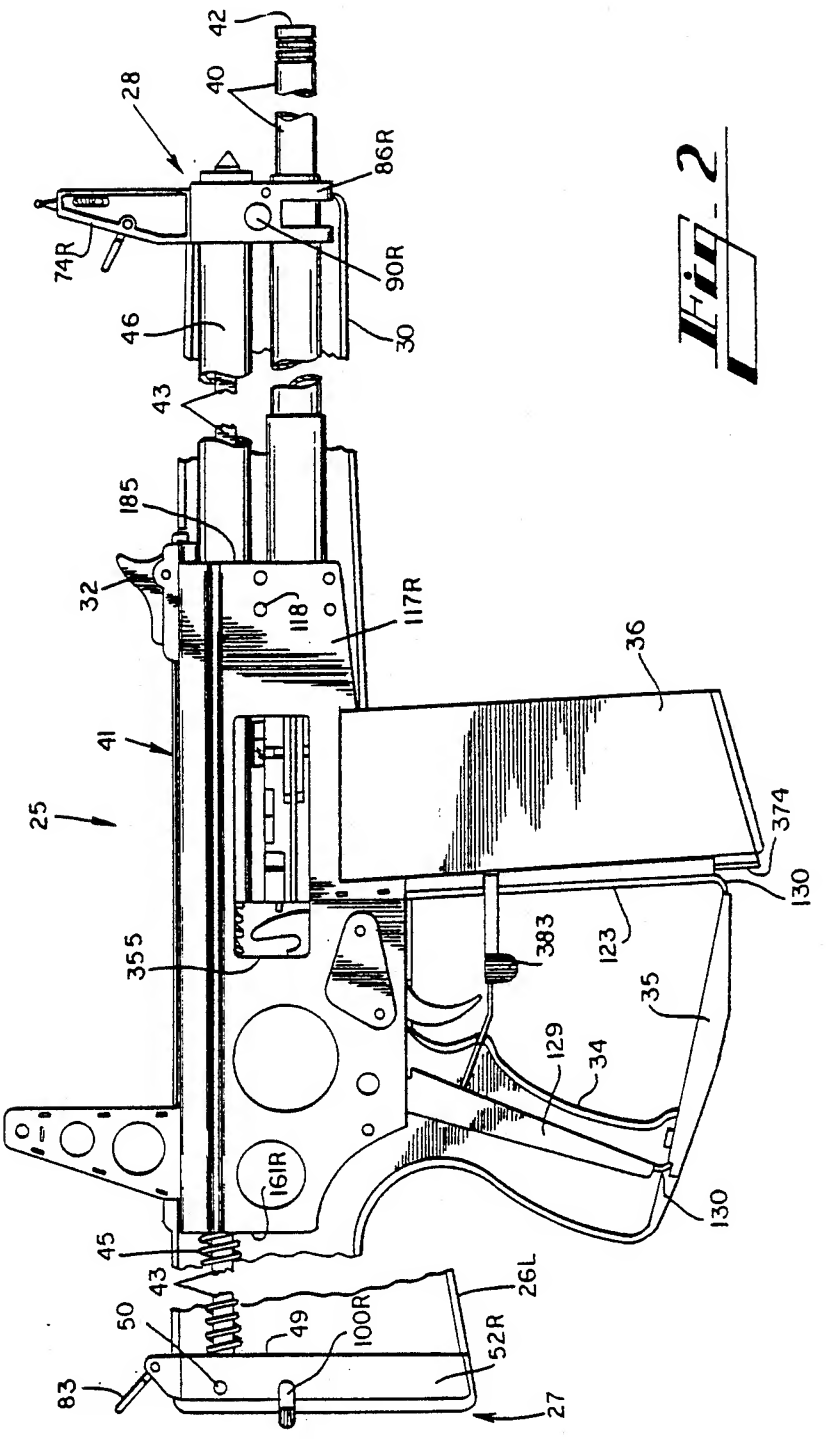
42
40
28
86R
74R
90R
46
30
43
185
32
118
117R
36
41
25
374
130
355
383
123
35
129
34
161R
130
45
43
26L
50
49
100R
52R
83
27

Fig. 2

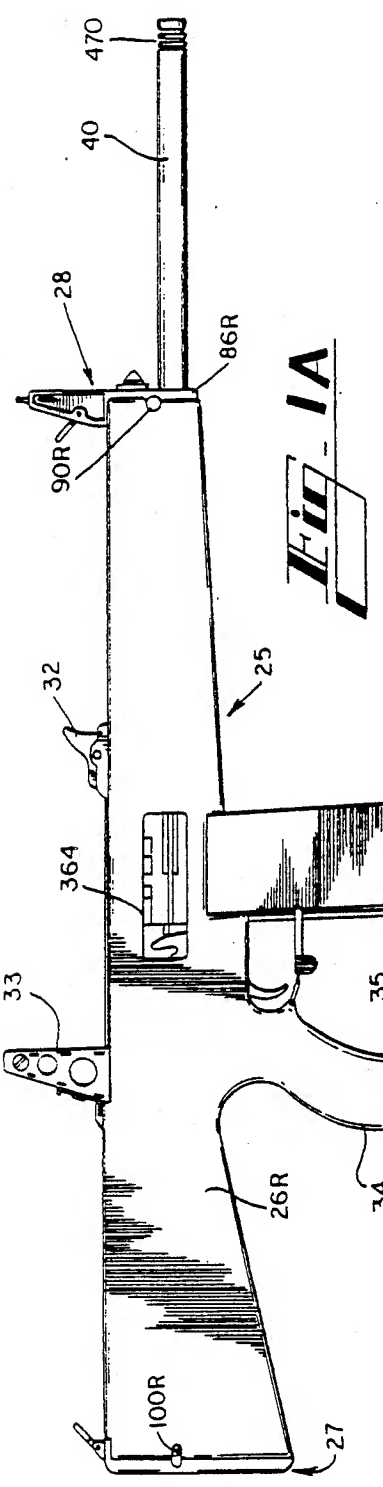
470
40
28
86R
90R
32
25
36
364
33
35
34
26R
100R
27

Fig. 1A

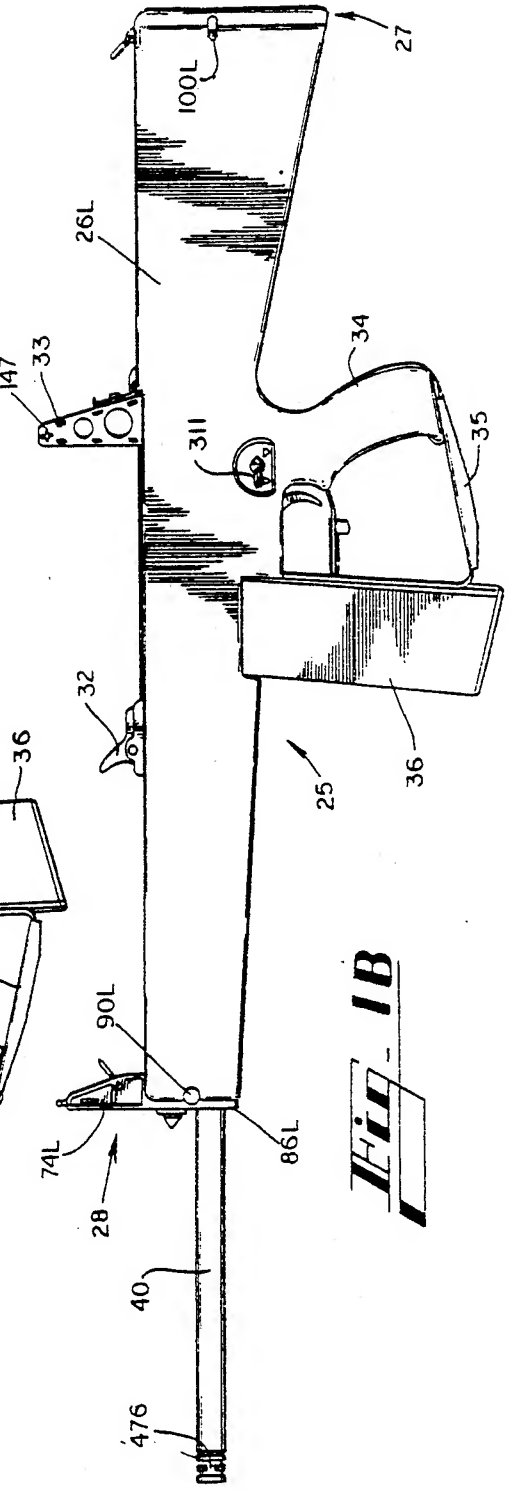
27
100L
26L
147
33
34
311
35
32
36
25
90L
74L
86L
28
40
476

Fig. 1B

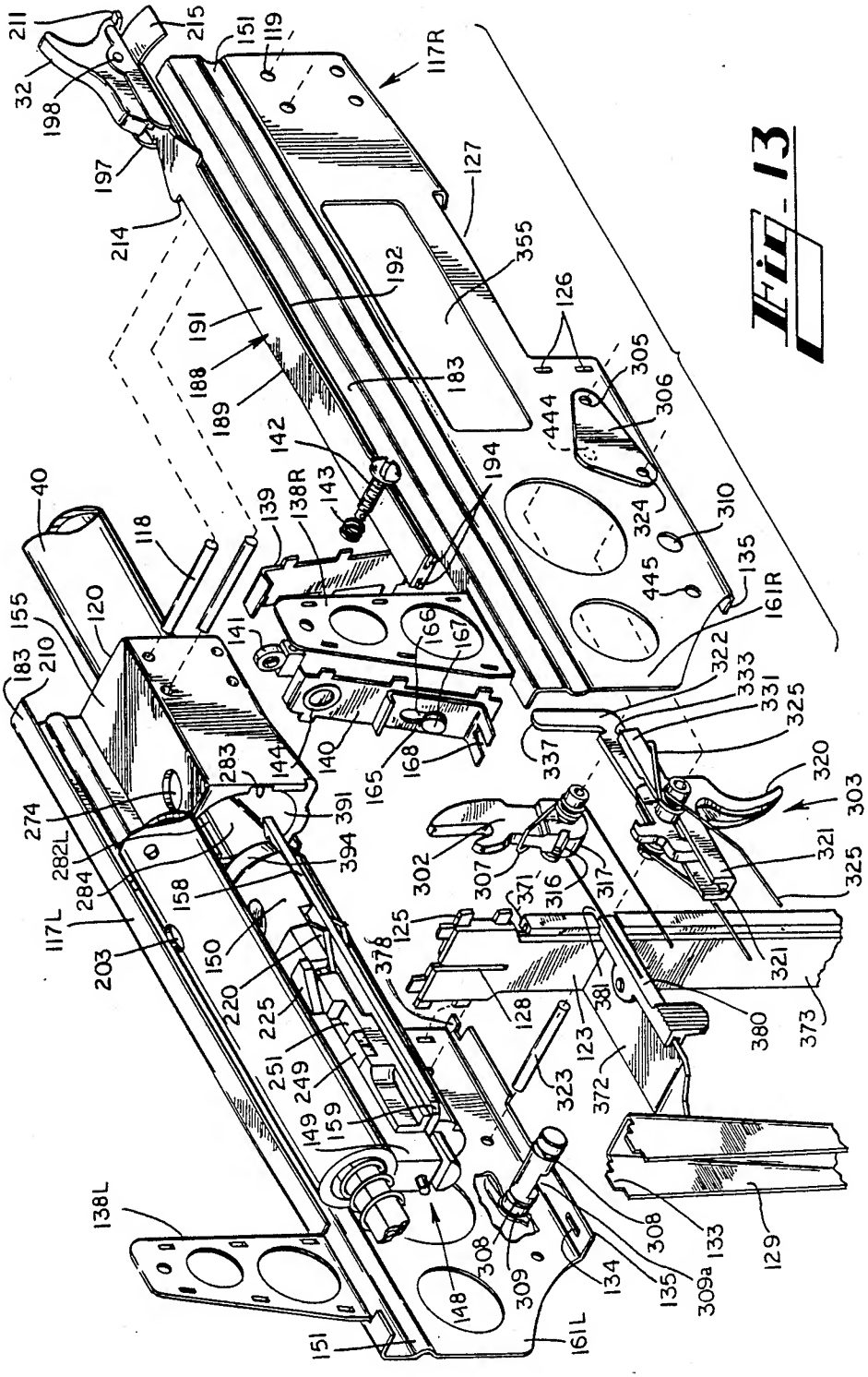
211
215
151
119
117R
32
198
197
214
127
355
192
126
191
188
189
183
305
306
444
142
143
138R
139
194
324
310
40
118
135
445
161R
155
120
183
210
141
166
167
322
333
331
325
140
165
168
337
320
303
283
144
391
274
282L
284
394
302
307
371
316
317
321
325
158
117L
203
150
125
378
220
225
128
381
123
380
373
251
249
323
372
149
159
138L
308
309
148
134
135
309a
133
129
151
161L

Fig. 13

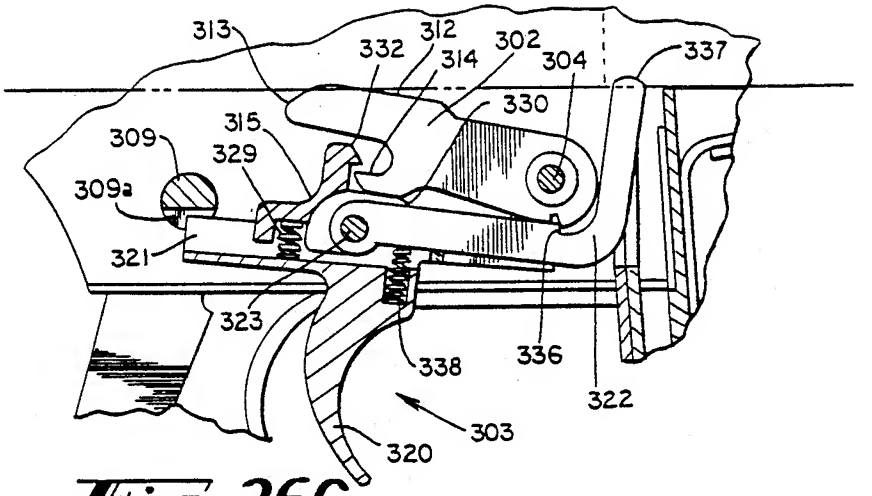

Fig_26C

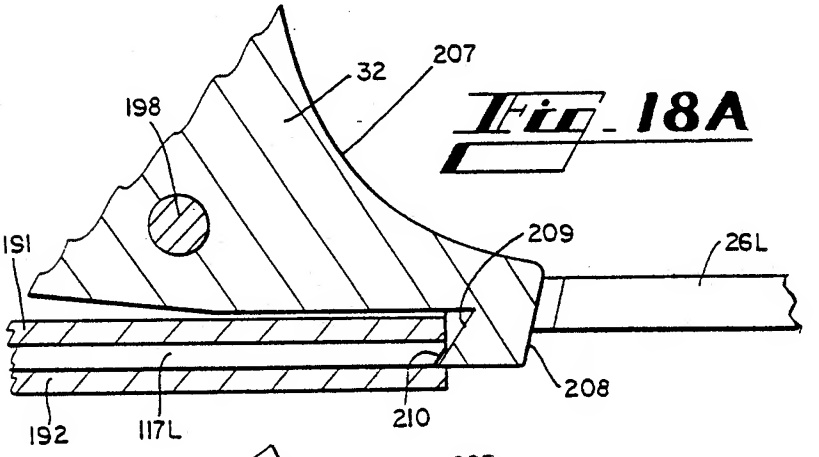

Fig_18A

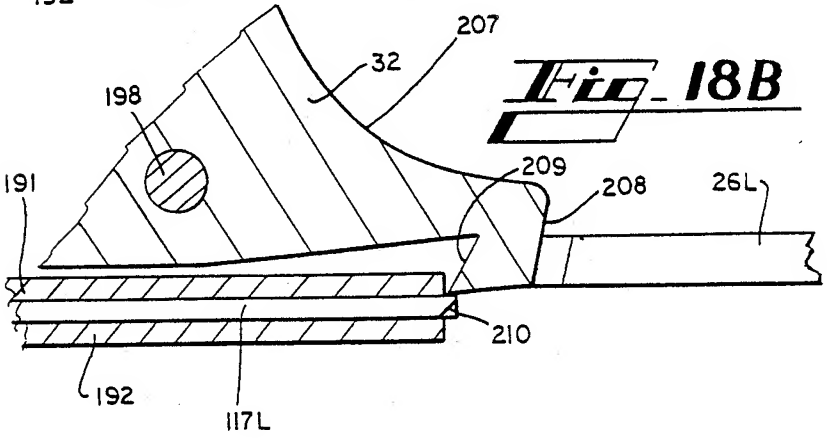

Fig_18B

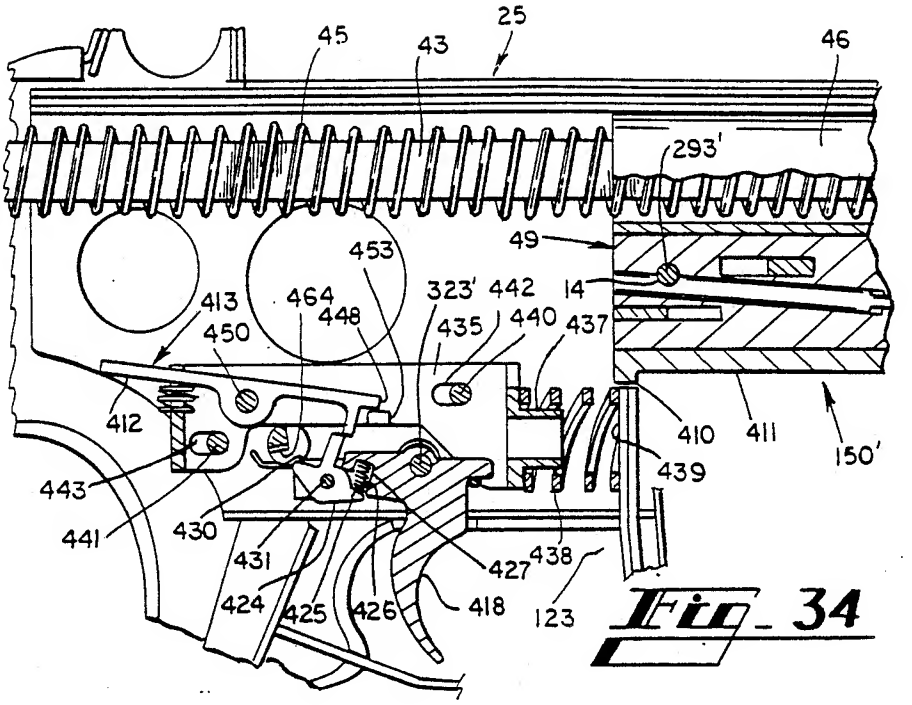
25
45
43
46
293'
49
453
323'
442
14
413
464
448
435
440
437
450
412
410
411
150'
439
443
441
430
431
427
438
424
425
426
418
123

Fig_34

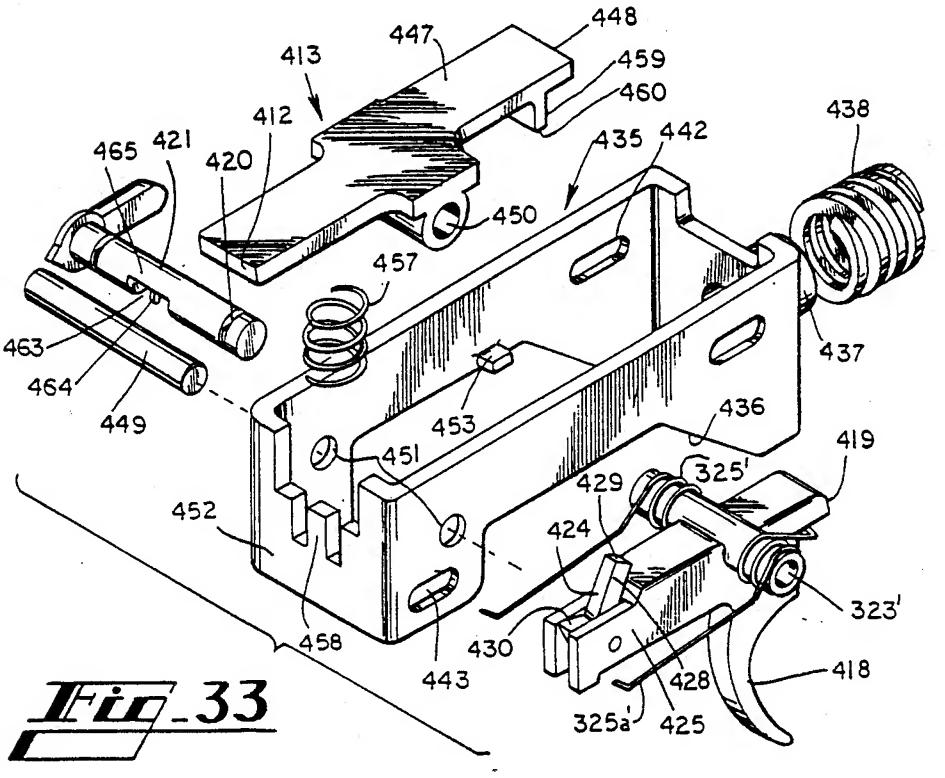
448
447
459
413
460
412
438
465
421
420
435
442
450
457
463
464
437
449
453
436
451
419
429
325'
452
424
323'
458
430
428
418
443
325a'
425

Fig_33

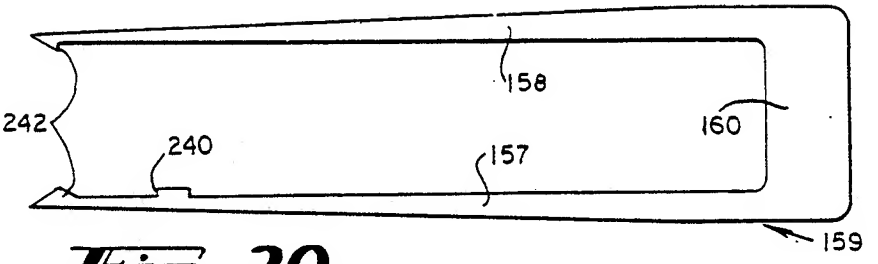

Fig. 20

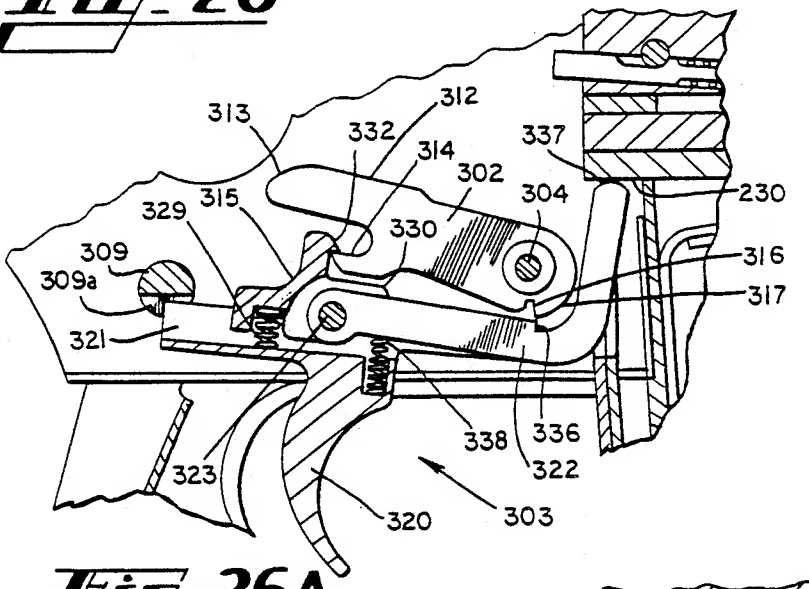

Fig. 26A

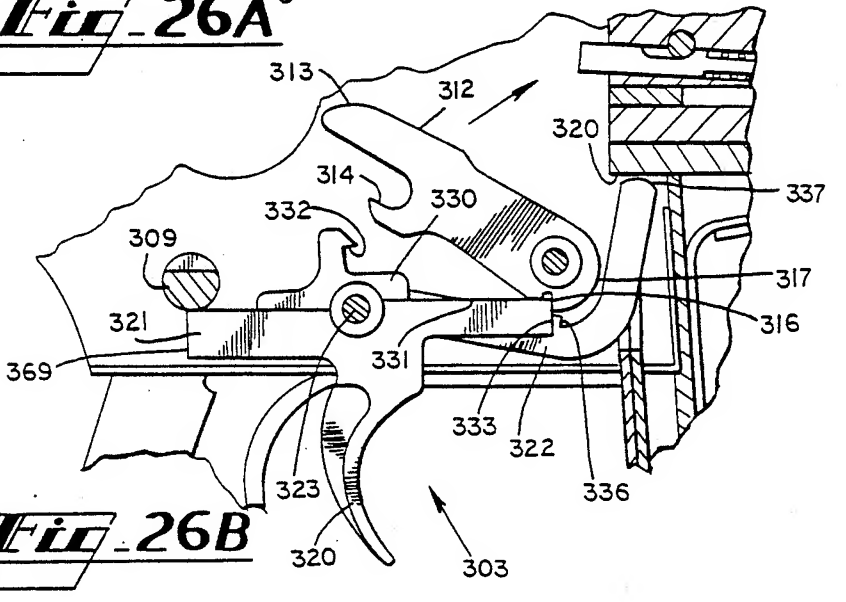

Fig. 26B

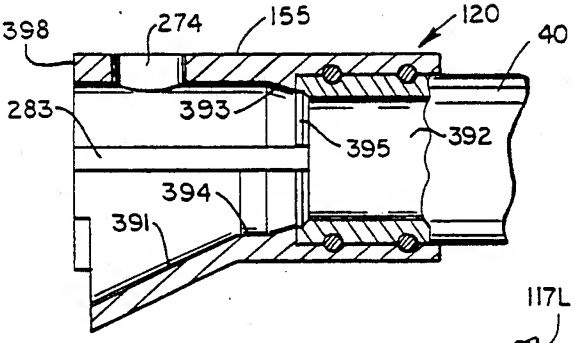

Fig. 31

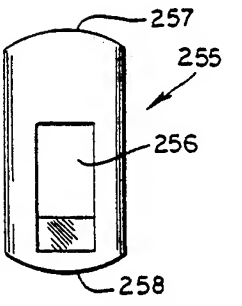

Fig. 25

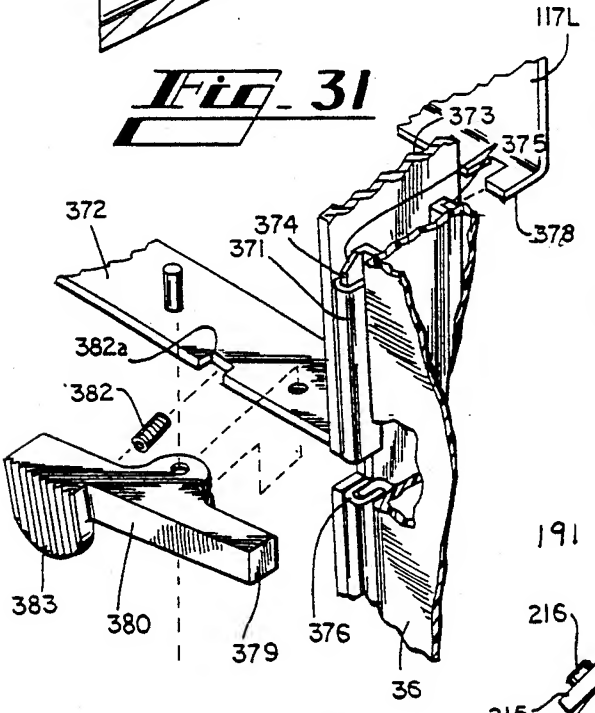

Fig. 30

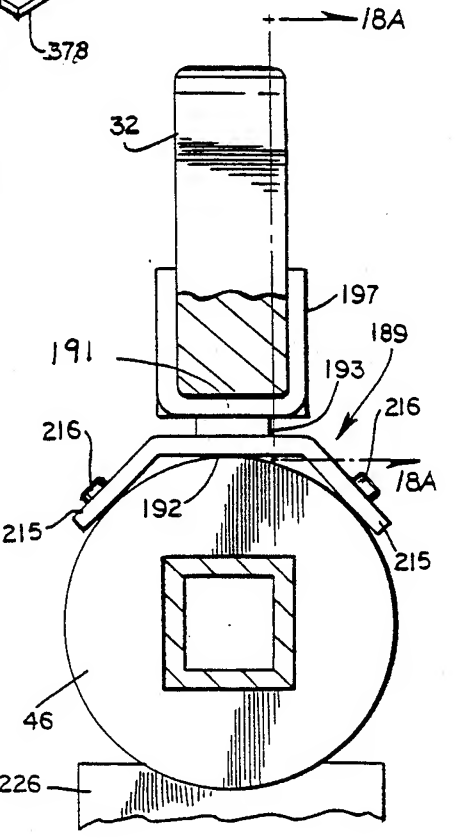

Fig. 22

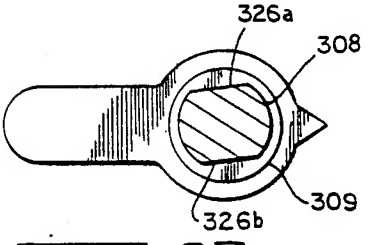

Fig. 27

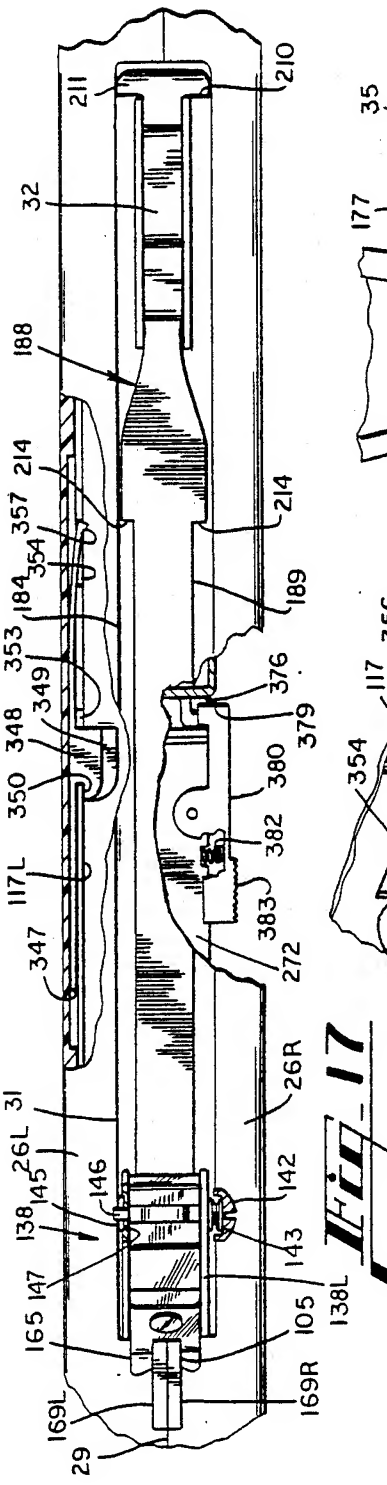

Fig_17

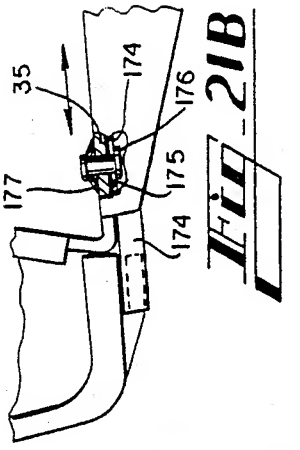

Fig_21B

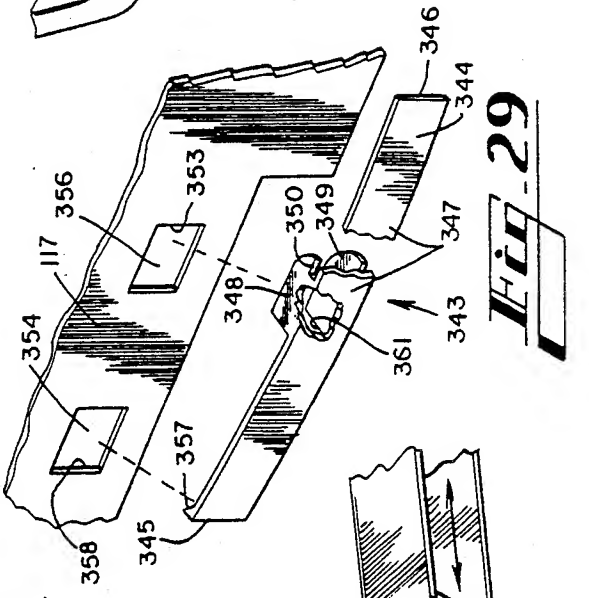

Fig_29

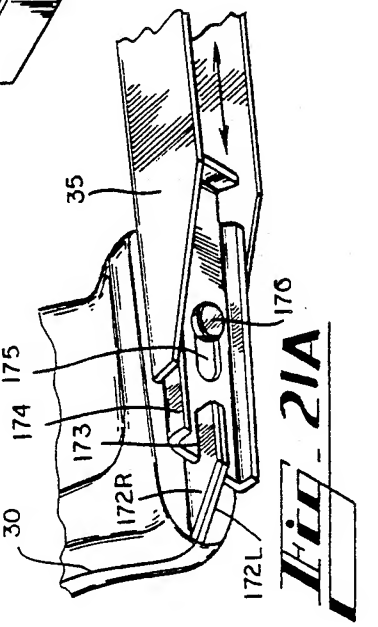

Fig_21A

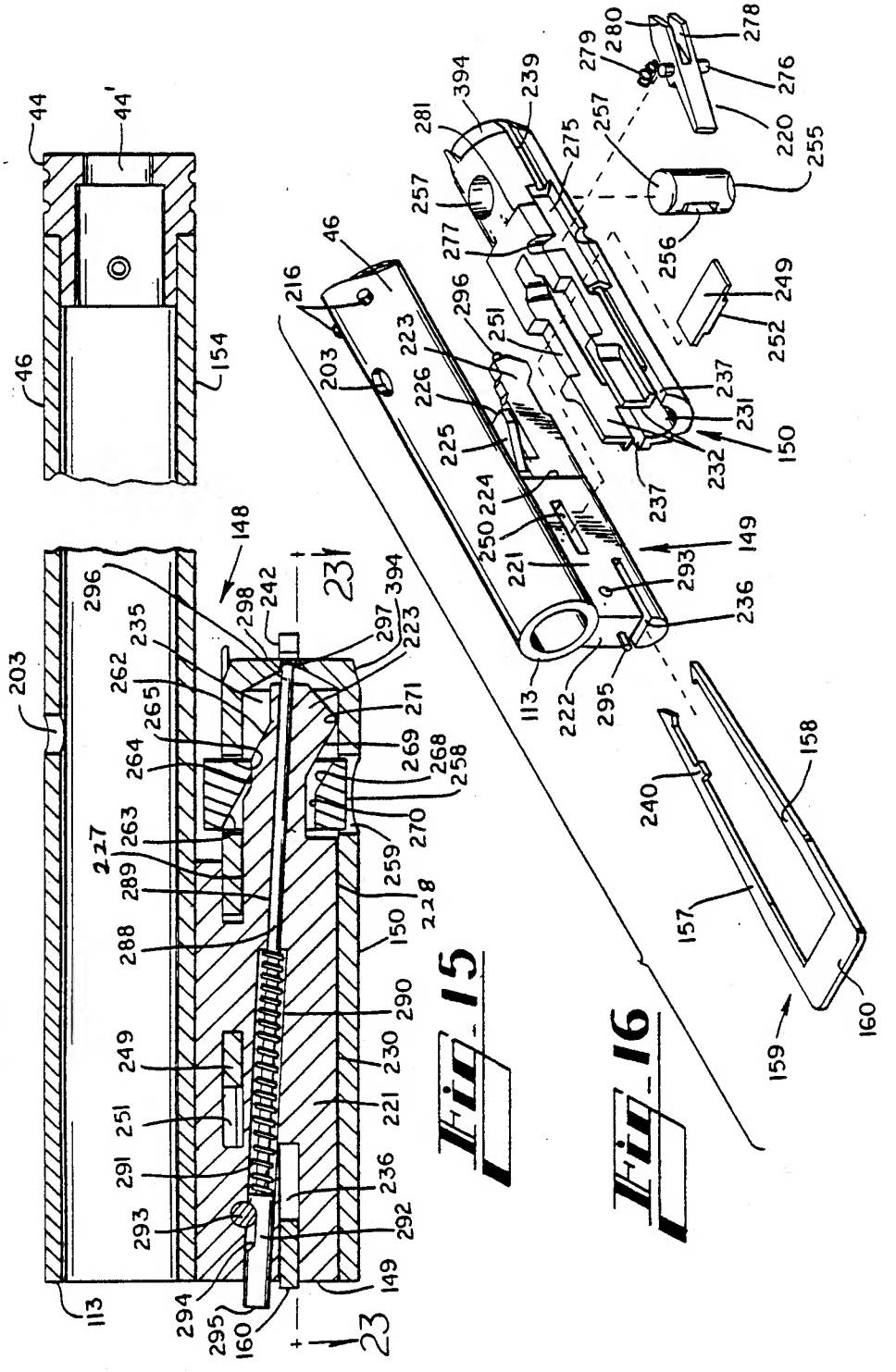
44
44'
46
154
148
296
298
242
231
394
297
223
235
262
265
264
263
227
289
288
249
251
291
293
294
295
160
23
203
271
269
268
258
270
259
228
150
290
230
221
236
292
149
113
216
46
203
223
226
225
224
250
221
296
251
277
257
281
394
239
275
257
279
280
278
276
220
255
256
249
252
237
231
232
150
237
149
293
236
222
295
113
240
158
157
159
160

Fig. 15

Fig. 16

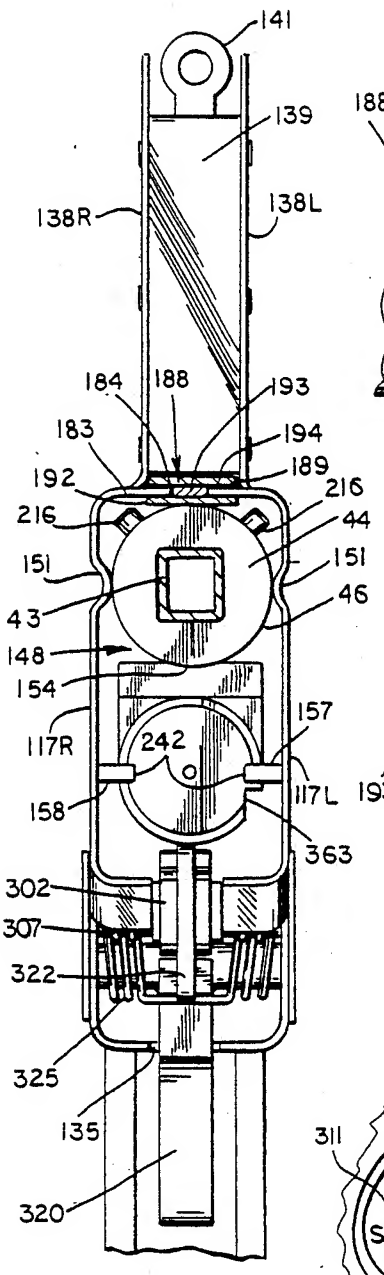

Fig_14

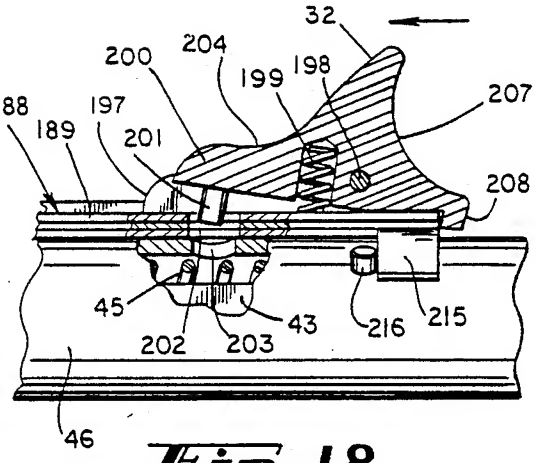

Fig_18

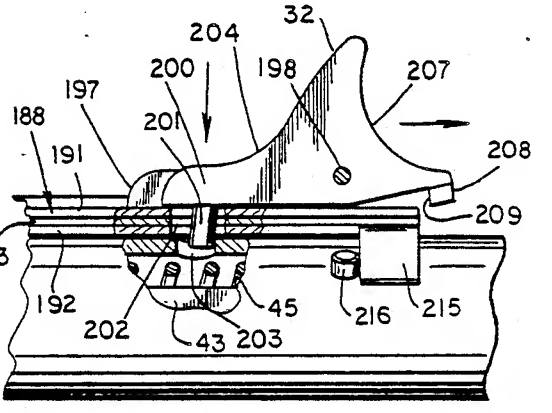

Fig_19

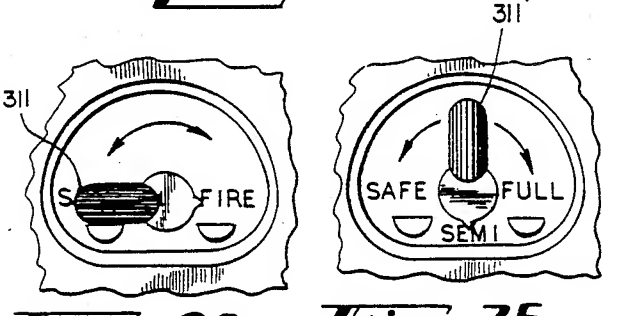

Fig_28

Fig_35

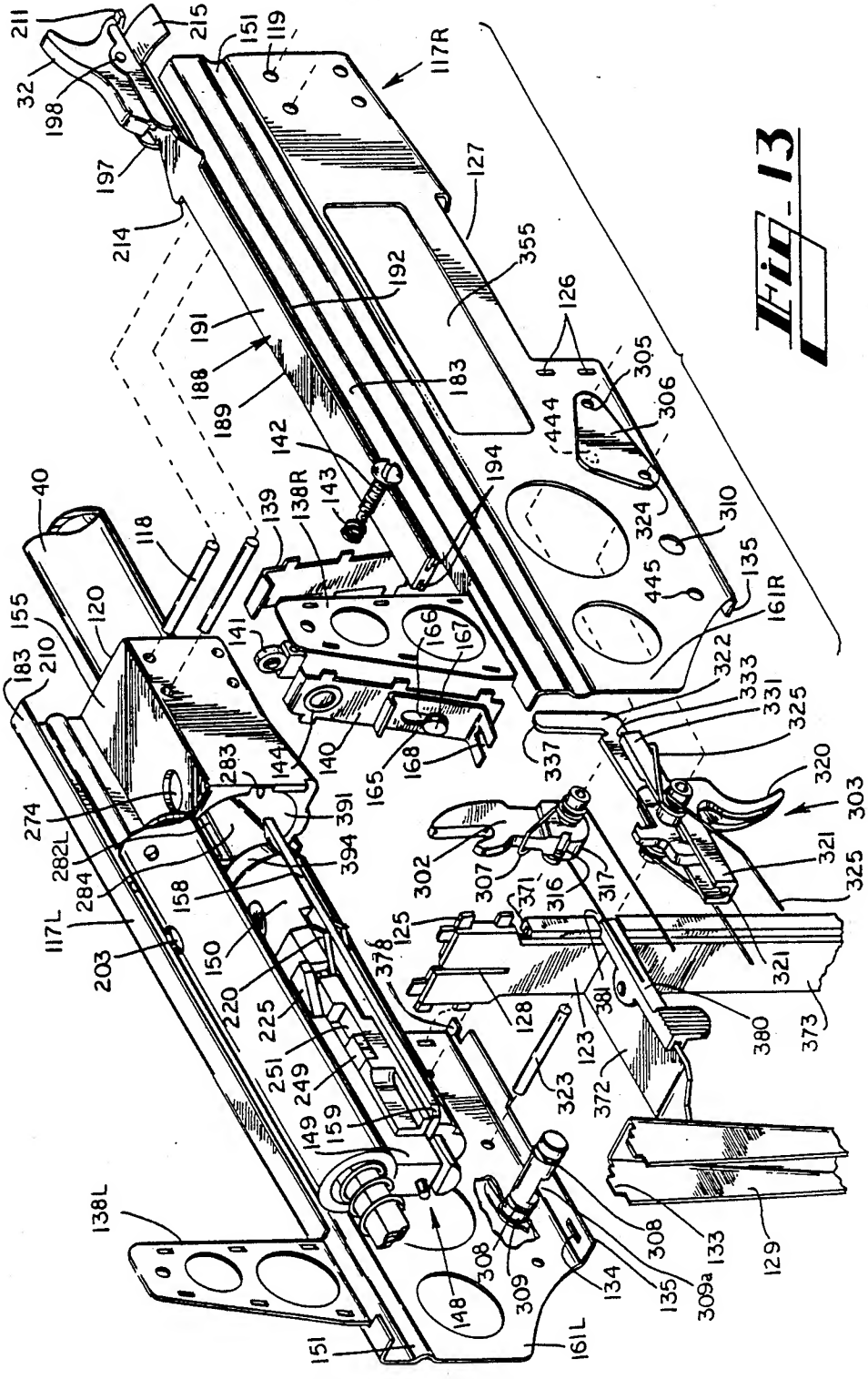
211
215
151
119
117R
32
198
197
214
127
355
192
126
191
188
189
183
305
306
444
142
143
138R
139
194
324
310
40
118
445
135
161R
155
120
183
210
141
166
167
322
333
331
325
140
165
168
337
320
303
283
144
391
274
282L
284
394
302
307
371
316
317
321
325
158
117L
203
150
125
378
220
225
128
381
123
380
373
251
249
323
372
149
159
138L
308
309
148
134
135
309a
133
129
151
161L

Fig. 13

Fig. 36

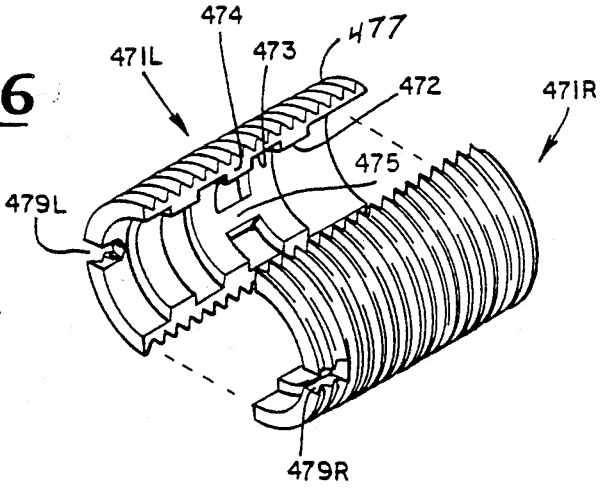

Fig. 37

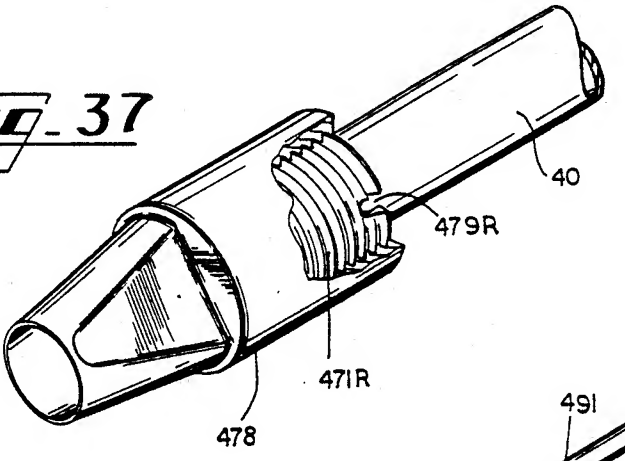

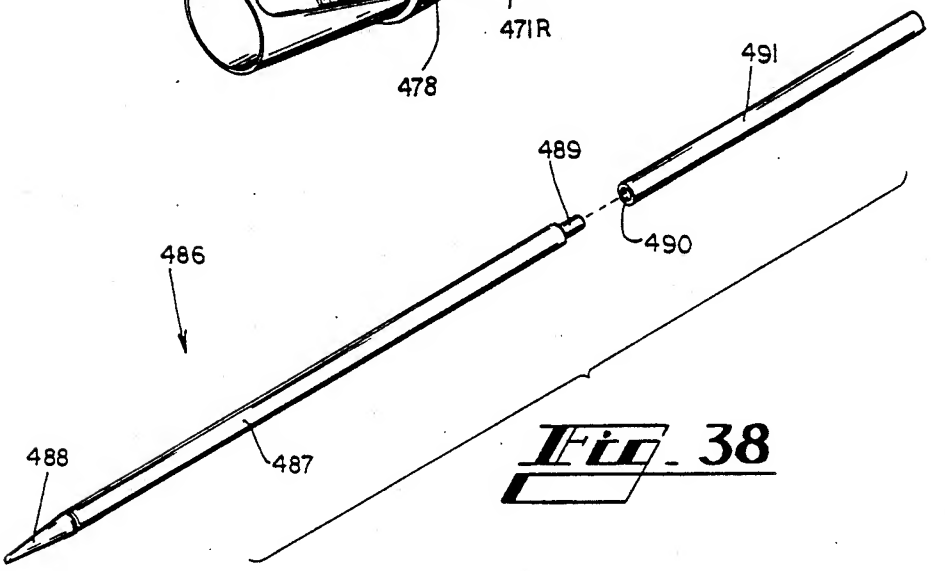

Fig. 38